1:Fix the lamp body to the wall with self tapping screws

2:Insert the lamp body downwards
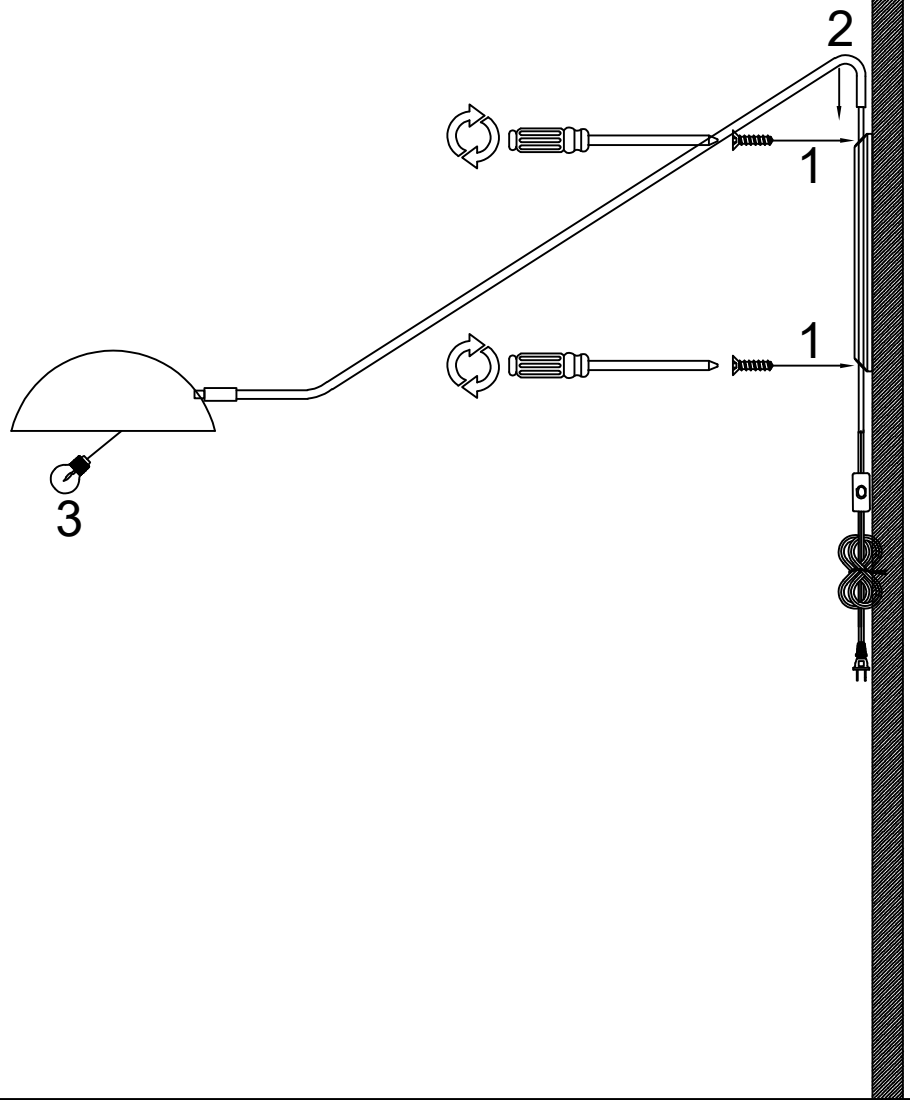
3:Installing bulb