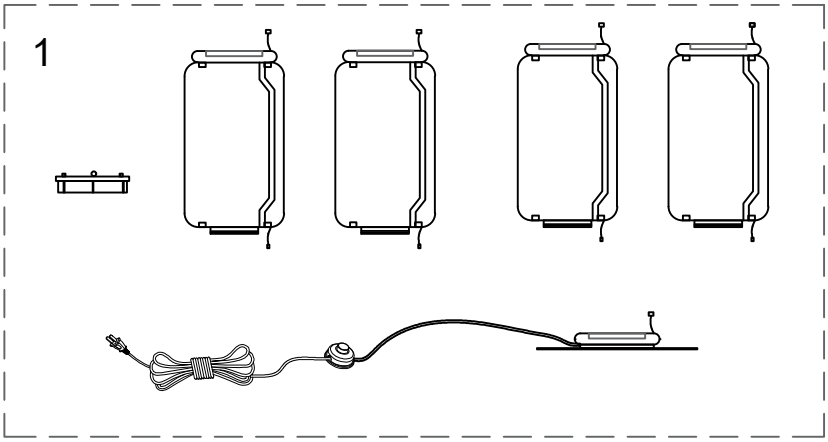
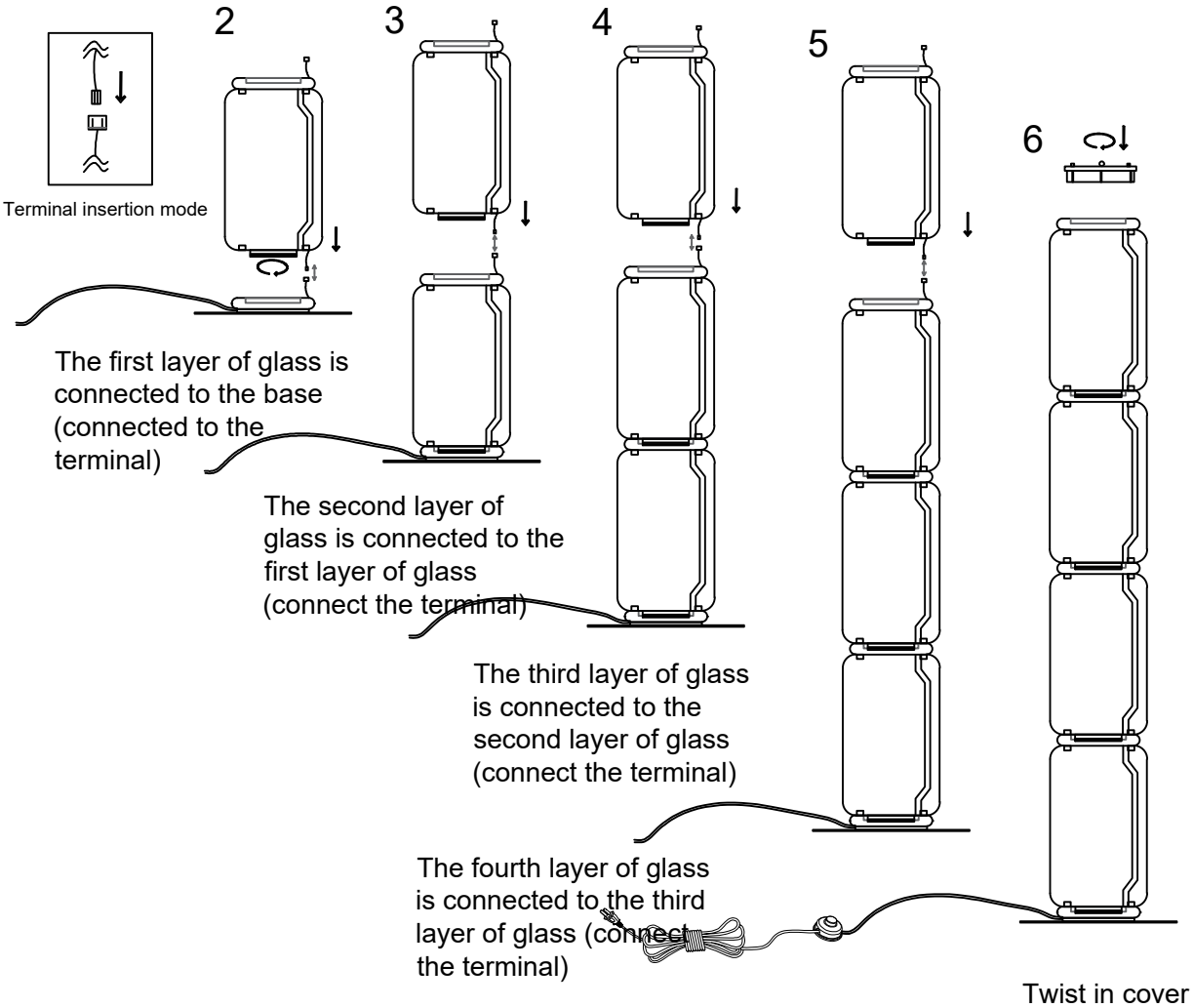
Remove all accessories and put them away